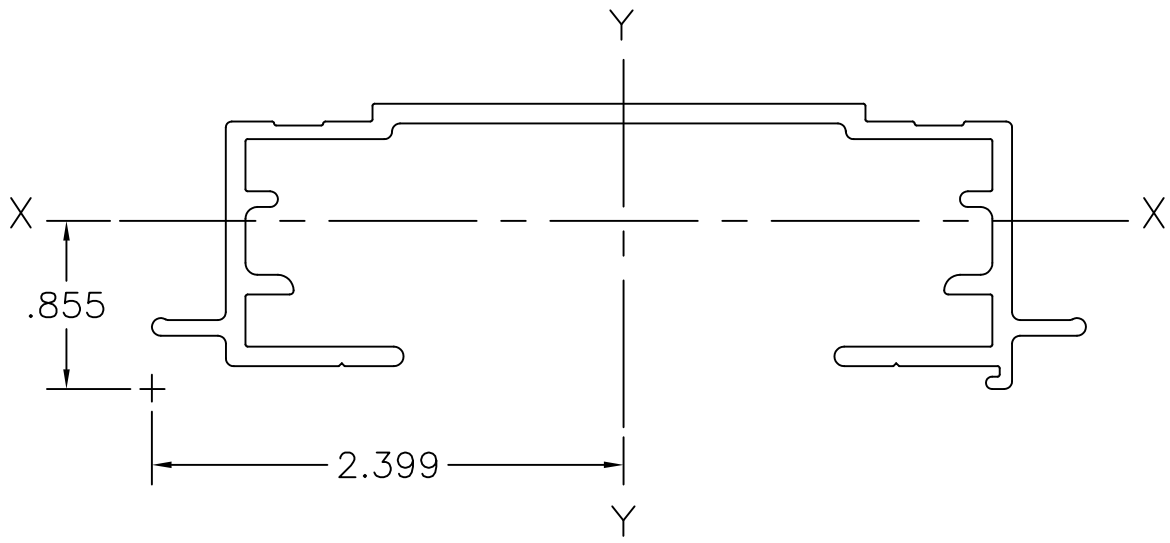

2Part 6" Double Face Body – Part #1936

Scale = 1 : 1

Area:	0.9261
Perimeter:	19.2604
Bounding box:	X: 0.0000 -- 4.7514
	Y: 0.0000 -- 1.4510
Centroid:	X: 2.3994
	Y: 0.8554
Moments of inertia:	X: 0.9193
	Y: 7.6373
Product of inertia:	XY: 1.8830
Radii of gyration:	X: 0.9964
	Y: 2.8718

Principal moments and X–Y directions about centroid:

I: 0.2416 along [1.0000 –0.0086]

J: 2.3059 along [0.0086 1.0000]

Section Modulus	X–X: 0.283in^3
	Y–Y: 0.961in^3

SignComp™
3032 WALKER RIDGE DR.
GRAND RAPIDS, MI 49544
TOLL FREE: (616) 784-0405 FAX: (616) 784-0411

CUSTOMER Standard	DWG NO. 1936		REV
DESCRIPTION 2Part 6" Double Face Body	DATE 2–7–13	SHEET 1 OF 1	